SPECIFICATION

Part No.	:	**GP.1575.25.4.A.02**
Product Name	:	**4mm thick GPS Patch Antenna**
Features	:	25mm*25mm*4mm Halogen Free ROHS Compliant

:

1. Introduction

This miniaturized ceramic GPS patch antenna is based on smart ***XtremeGain™*** technology. It is mounted via pin and double-sided adhesive and has been tuned as optimal solution for the customer device environment.

2. Specification Table

Original Patch Specification tested on 50*50mm ground plane

No	Parameter	Specification	
1	Range of Receiving Frequency Center Frequency	1575.42MHz +/- 1.023MHz 1575MHz +/- 3MHz	
2	Impedance	50Ω	
3	Bandwidth	10 MHz min Return Loss <-10dB	
4	VSWR	1.2:1	Center Frequency
5	Gain toward Zenith	1.55 dBic typ.	
6	Gain at 10°Elevation	-2.5 dBic typ.	
7	Axial Ratio	3dB Max.	
8	Polarization	Right Hand Circular Polarization	
9	Frequency Temperature Coefficient（τf）	0 ± 20ppm/°C	
10	Operating Temperature	-40ºC to +85ºC	

3. Electrical Specification

3.1 Return Loss

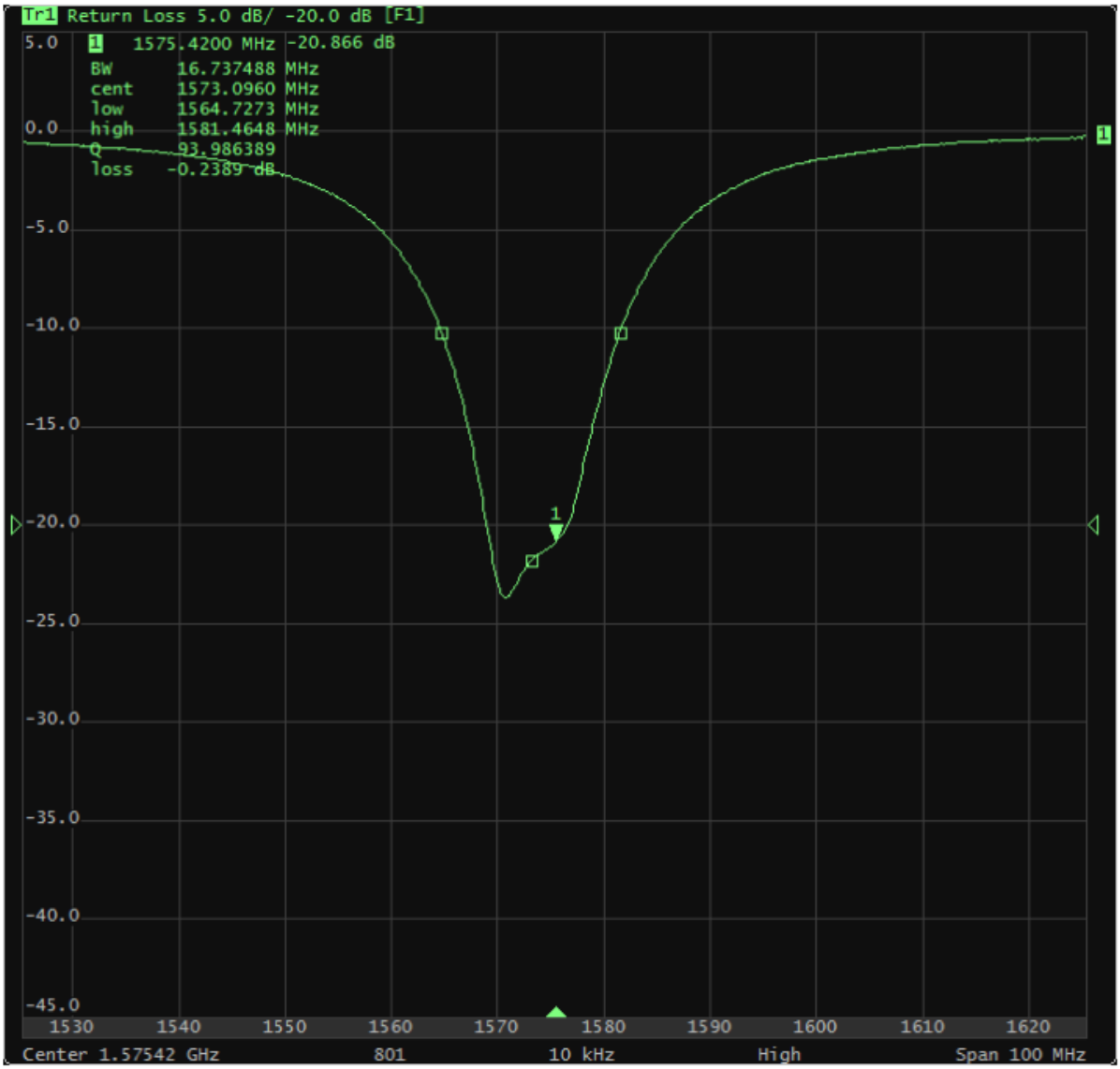

3.2 Smith Chart

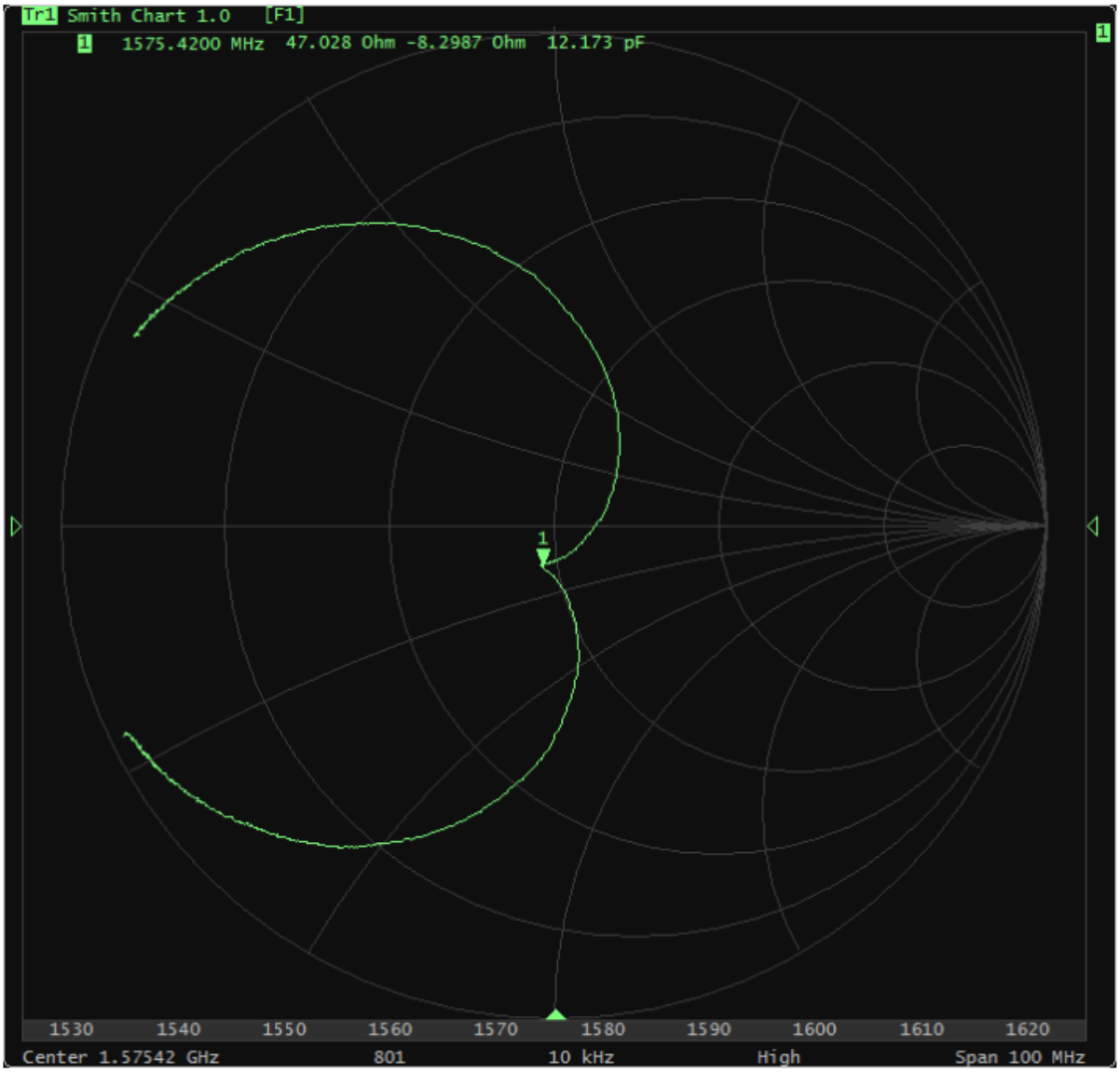

3.3VSWR

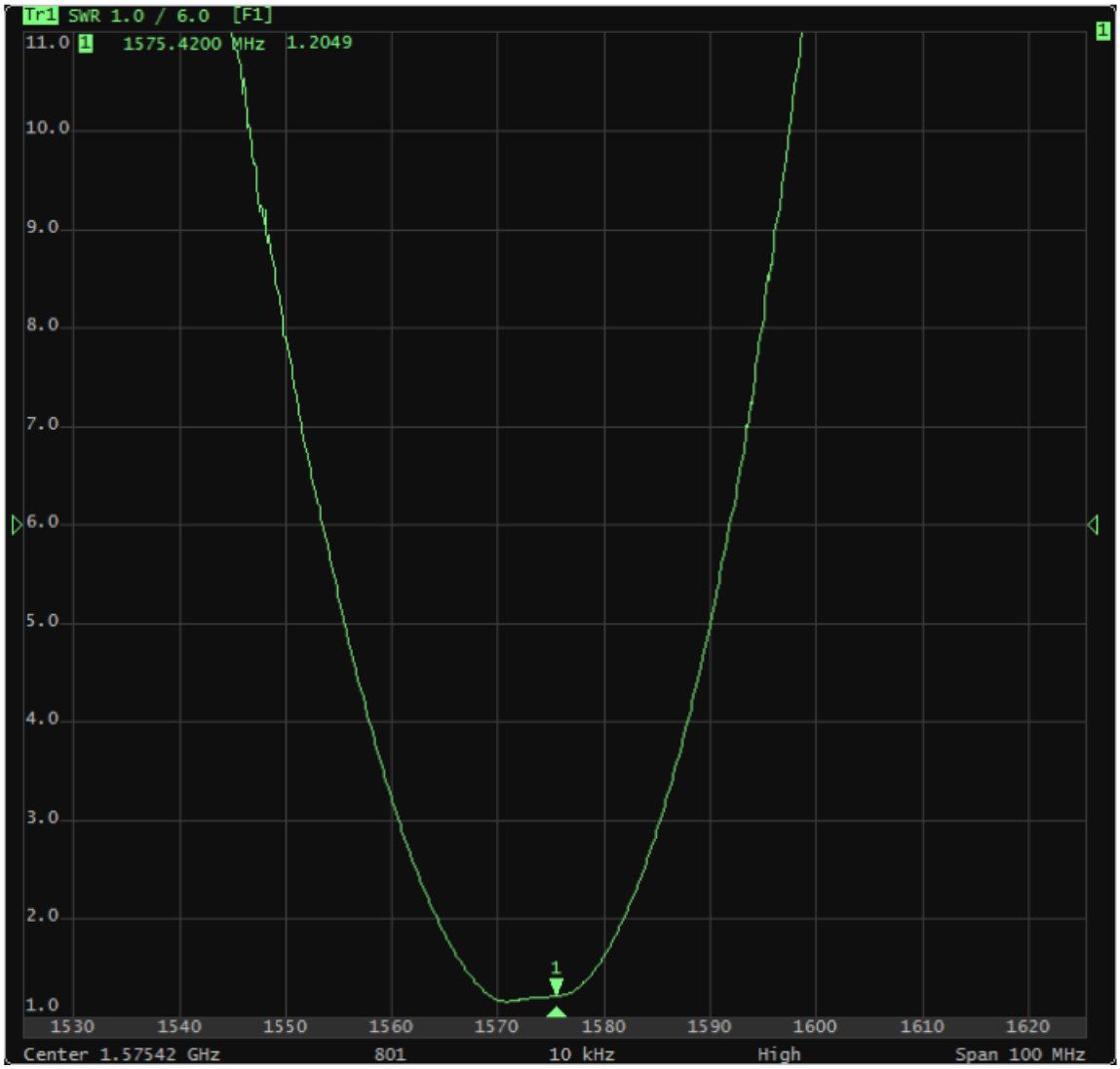

4. 2D Radiation Patterns

XZ-Plane

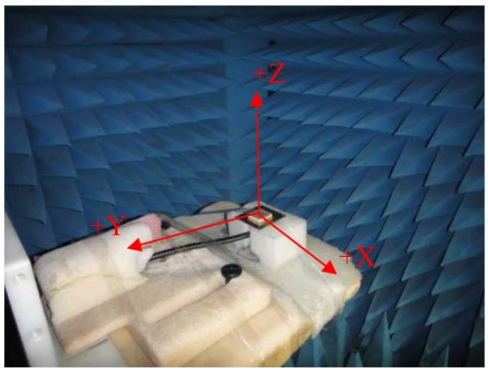

YZ-Plane

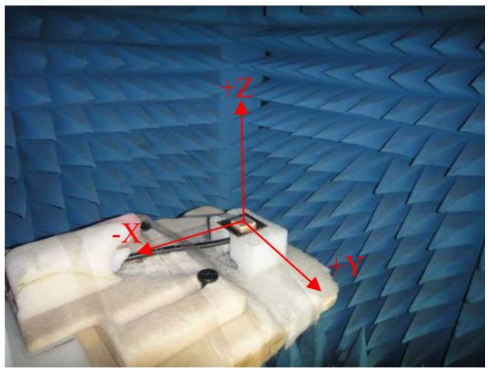

4.1 XZ Patterns

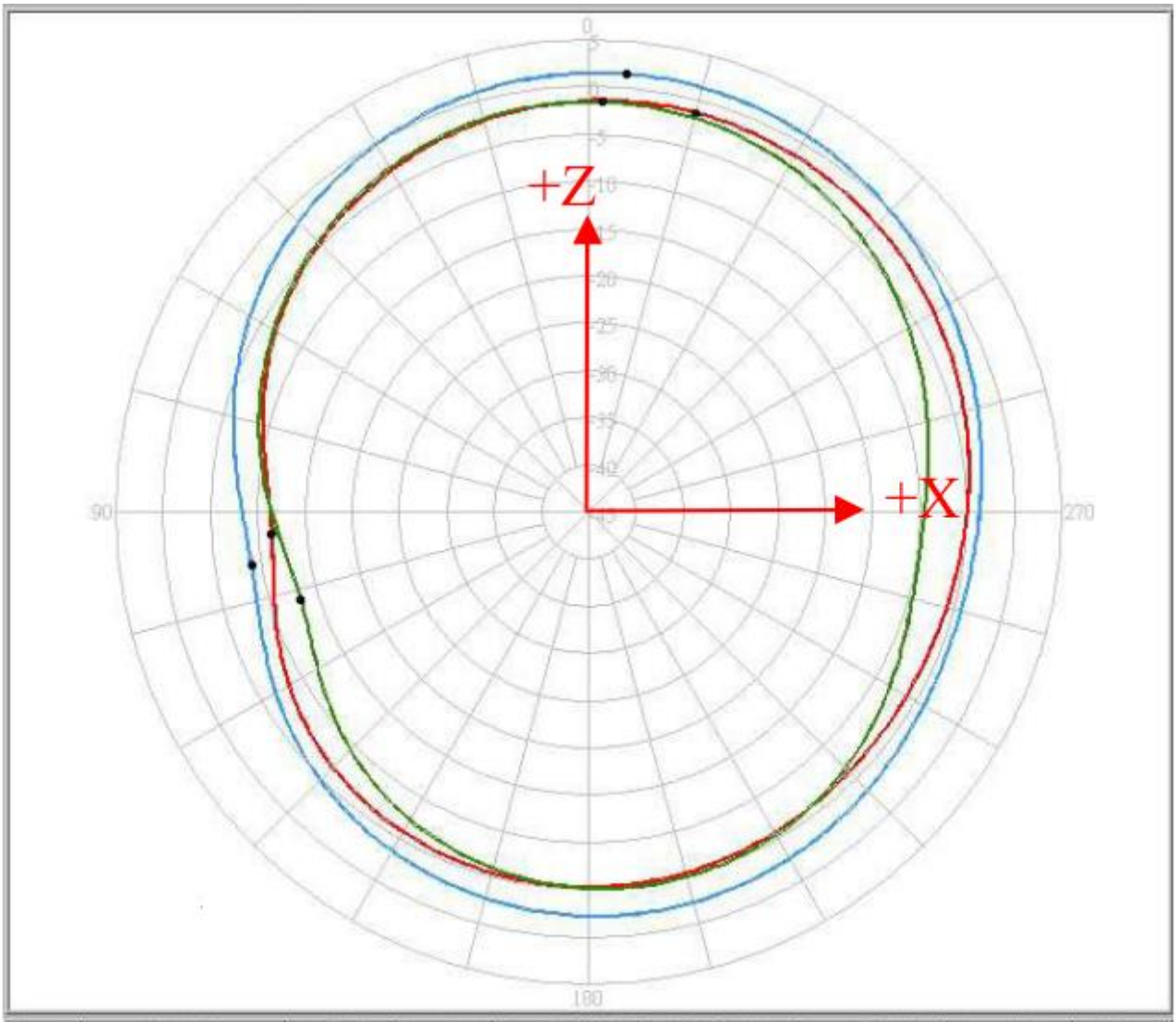

Pattern		Model No.	Test Mode	Freq(MHz)	Max Gain(dBi)	Min Gain(dBi)	Avg. Gain(dBi)	Source Polar.	Date
1		GP.1575.25.4.A.02	XZ	1575.00	-1.28 / 345.00	-11.43 / 94.00	-4.54	Hor.	2013/7/26
2		GP.1575.25.4.A.02	XZ	1575.00	-1.60 / 358.00	-13.17 / 107.00	-5.50	Ver.	2013/7/26
3		GP.1575.25.4.A.02	XZ	1575.00	1.53 / 355.00	-8.89 / 99.00	-1.98	V+H	2013/7/26

4.2 YZ Patterns

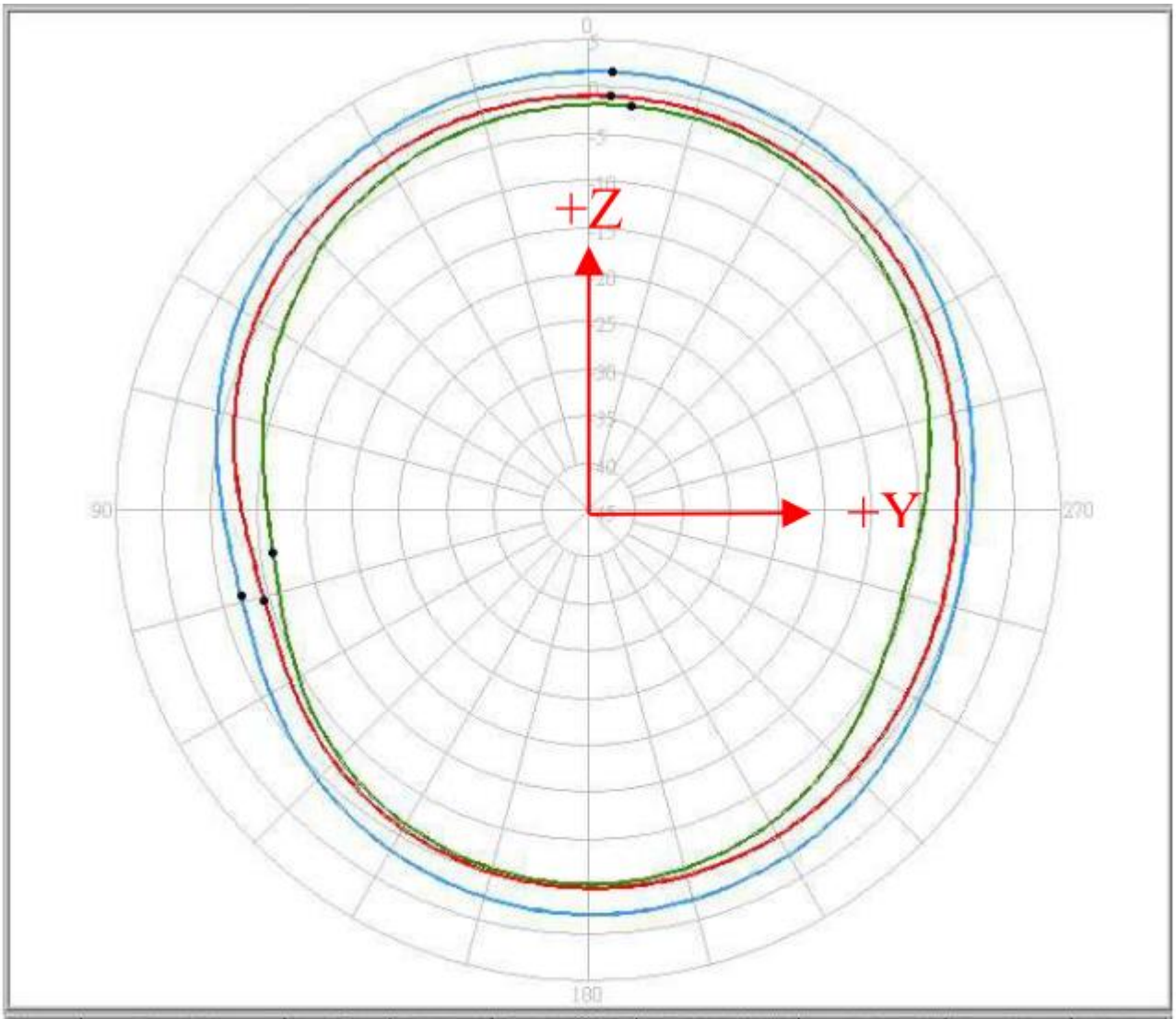

Pattern		Model No.	Test Mode	Freq(MHz)	Max Gain(dBi)	Min Gain(dBi)	Avg. Gain(dBi)	Source Polar.	Date
1		GP.1575.25.4.A.02	YZ	1575.00	-1.00 / 356.97	-9.42 / 105.88	-4.18	Hor.	2013/7/26
2		GP.1575.25.4.A.02	YZ	1575.00	-1.88 / 353.83	-11.35 / 97.71	-5.68	Ver.	2013/7/26
3		GP.1575.25.4.A.02	YZ	1575.00	1.59 / 356.91	-7.16 / 103.89	-1.87	V+H	2013/7/26

5. Gain Pattern Value

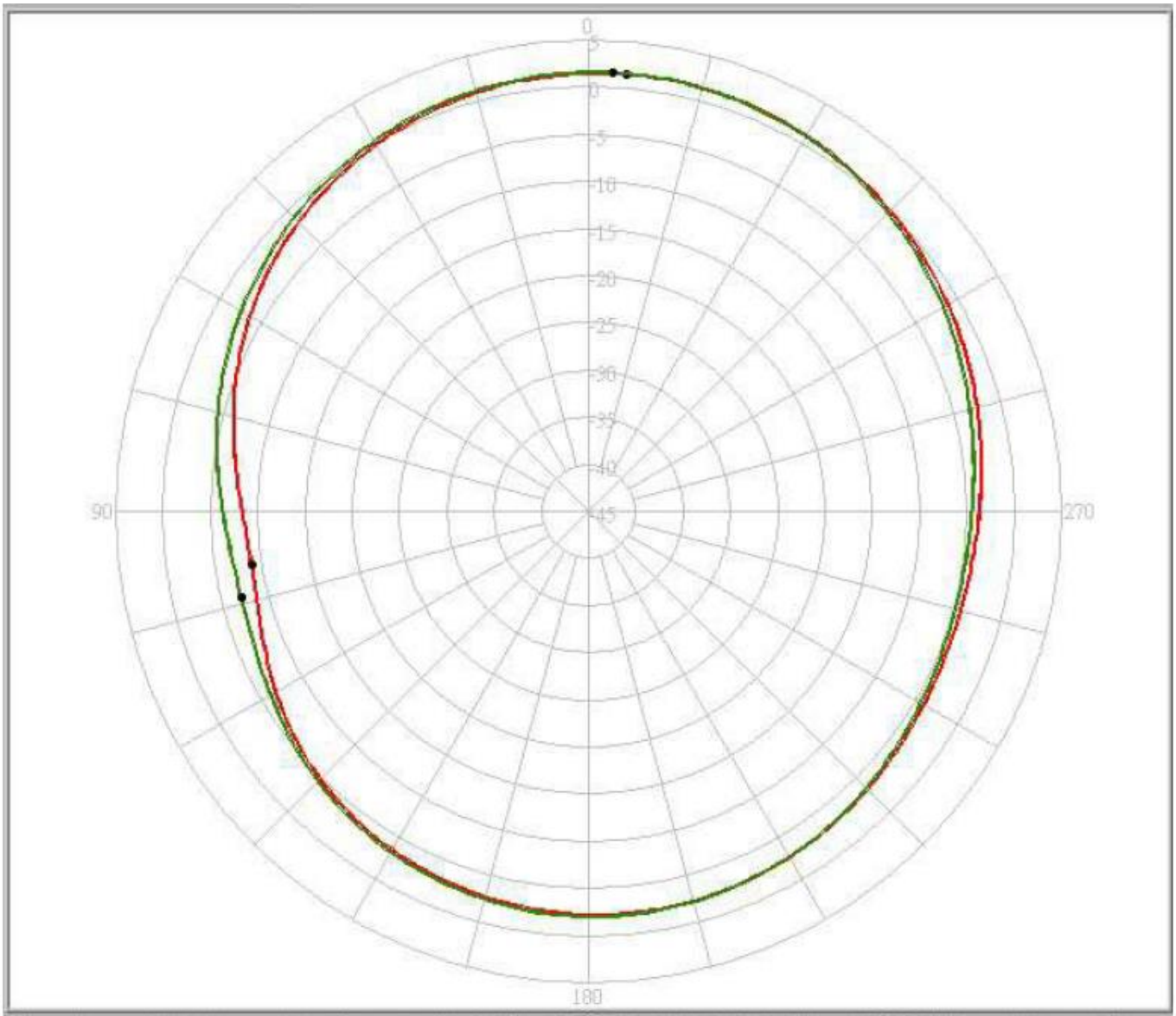

Pattern		Model No.	Test Mode	Freq(MHz)	Max Gain(dBi)	Min Gain(dBi)	Avg. Gain(dBi)	Source Polar.	Date
1		GP.1575.25.4.A.02	XZ	1575.00	1.53 / 355.00	-8.89 / 99.00	-1.98	V+H	2013/7/26
2		GP.1575.25.4.A.02	YZ	1575.00	1.59 / 356.91	-7.16 / 103.89	-1.87	V+H	2013/7/26

Angle	XZ-Plane	YZ-Plane
90°	-8.37	-6.59
75°	-6.12	-4.70
60°	-3.66	-2.80
45°	-1.65	-1.05
30°	-0.11	0.26
15°	0.94	1.14
0°	1.45	1.55
345°	1.46	0.00
330°	0.99	0.00
315°	0.11	0.57
300°	-1.10	-0.82
285°	-2.45	-2.45
270°	-3.69	-3.94

（Unit：dBi）

6. Axial Ratio Pattern

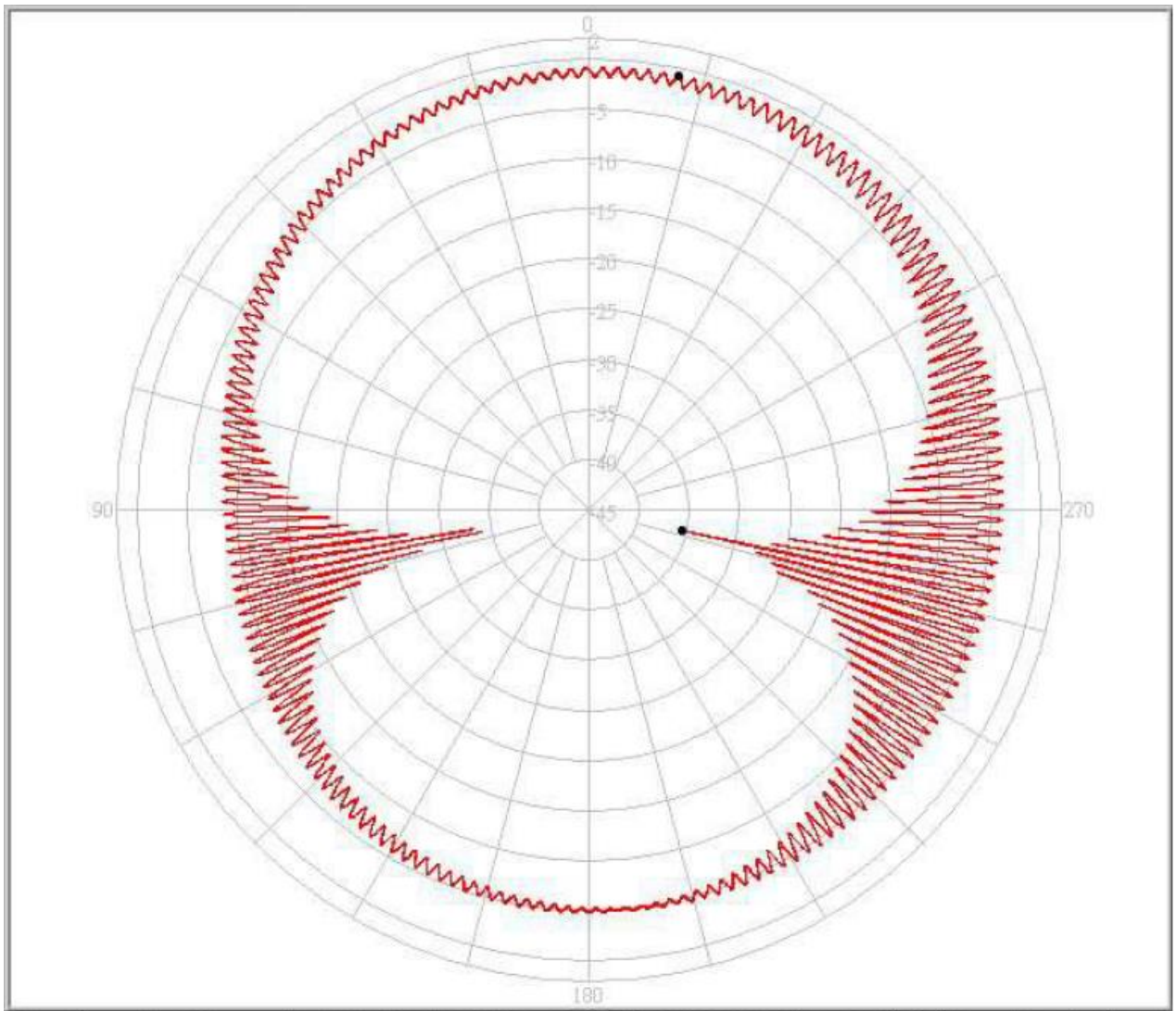

Pattern	Model No.	Test Mode	Freq(MHz)	Max Gain(dBi)	Min Gain(dBi)	Avg. Gain(dBi)	Source Polar.	Date
1	GP.1575.25.4.A.02	Axial Ratio	1575.42	-0.84 / 348.27	-35.58 / 257.52	-4.86	CP	2013/7/26

Angle	Axial Ratio
90°	10.17
75°	3.27
60°	2.03
45°	1.51
30°	1.14
15°	0.87
0°	0.83
345°	1.14
330°	1.88
315°	2.94
300°	4.58
285°	6.86
270°	12.88

（At 1575.42MHz）

7. 2D Mechanical Drawing

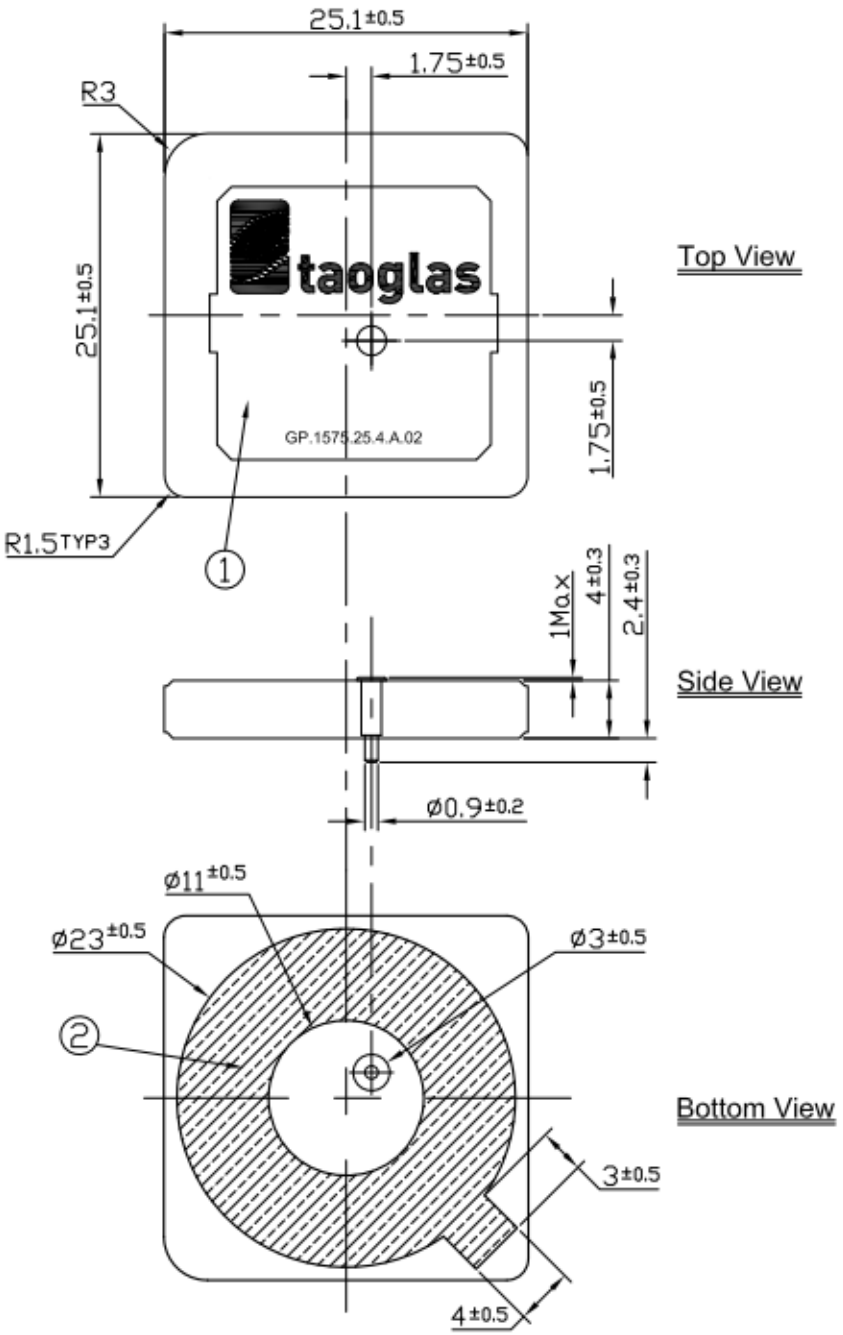

NOTES:
1.Double sided adhesive area

	Name	Material	Finish	QTY
1	GP.1575 Patch 25x25x4	Ceramic	Clear	1
2	Double sided Adhesive	NITTO 5015	White Liner	1

5.1 Layout Dimension

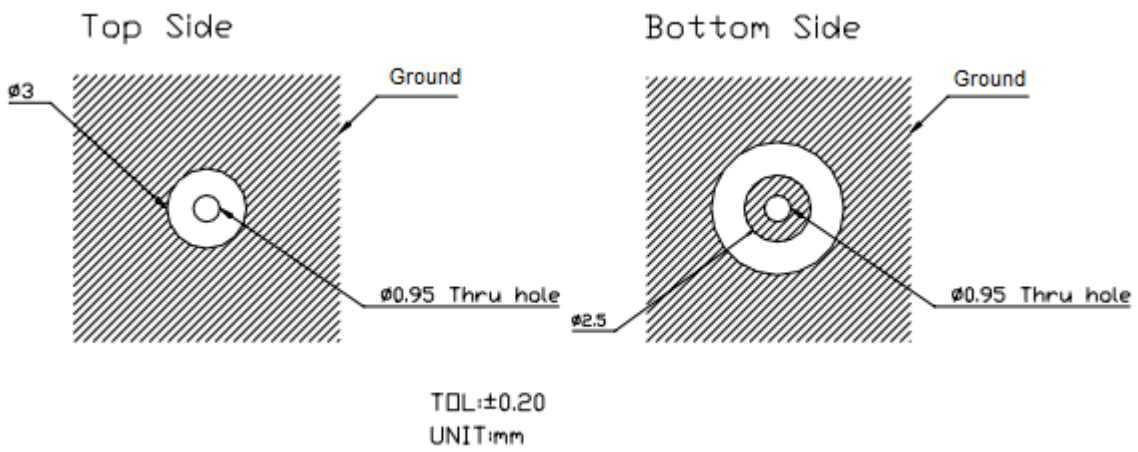

*Note Layout Dimensions may be affected by the thickness of the PCB

8. Test Jig and Dimension

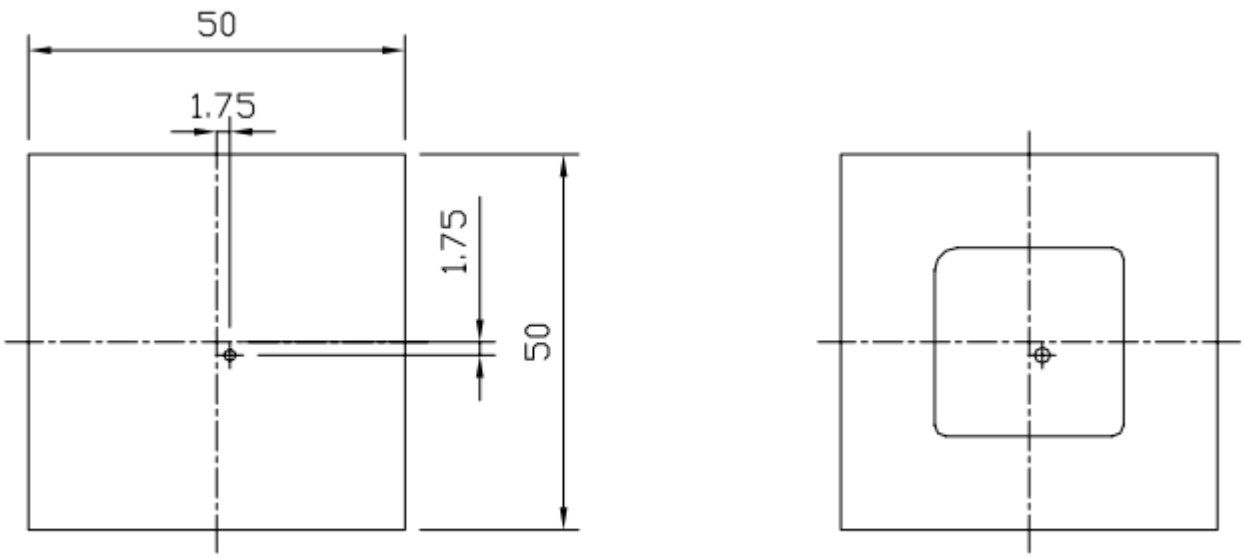

8.1 Test Fixture Antenna Setup and Measurements

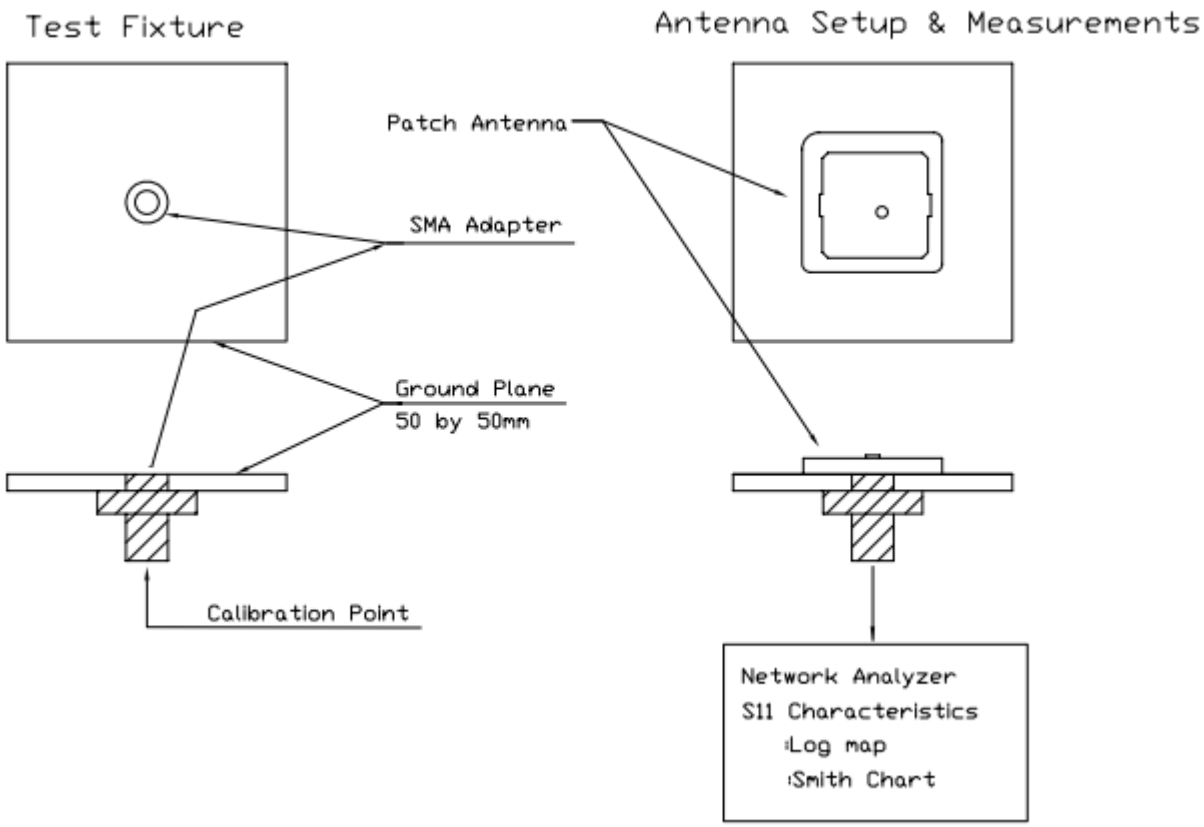

9. Packaging

50 pieces per Tray
200 per Inner Carton
4 x 200 – 800 pieces per Outer Carton

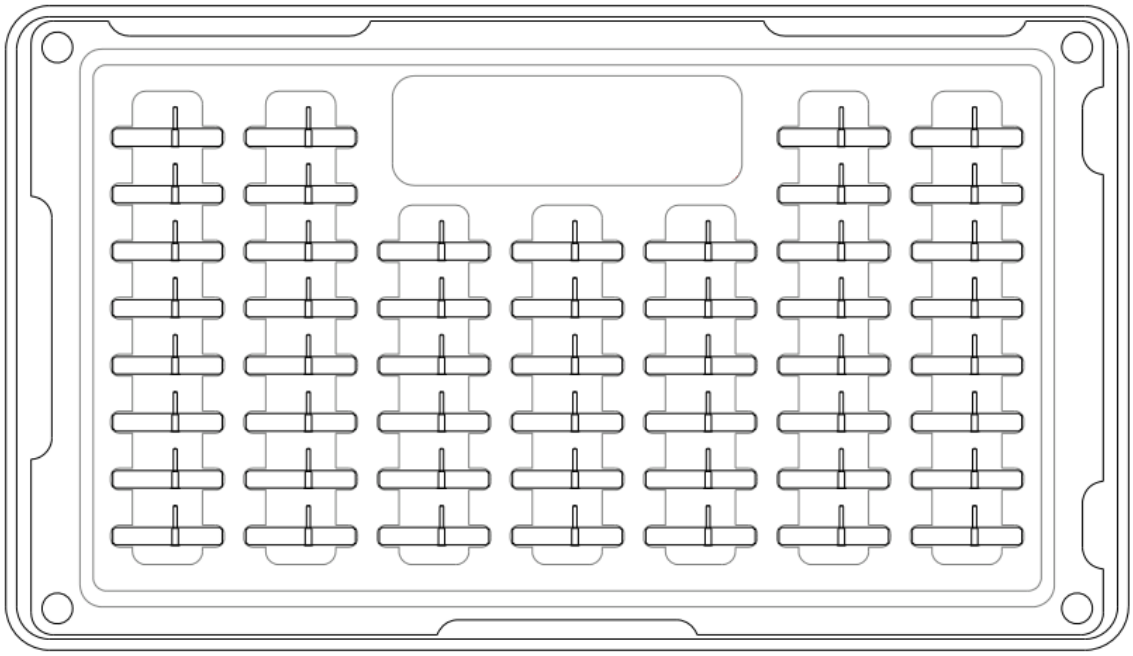

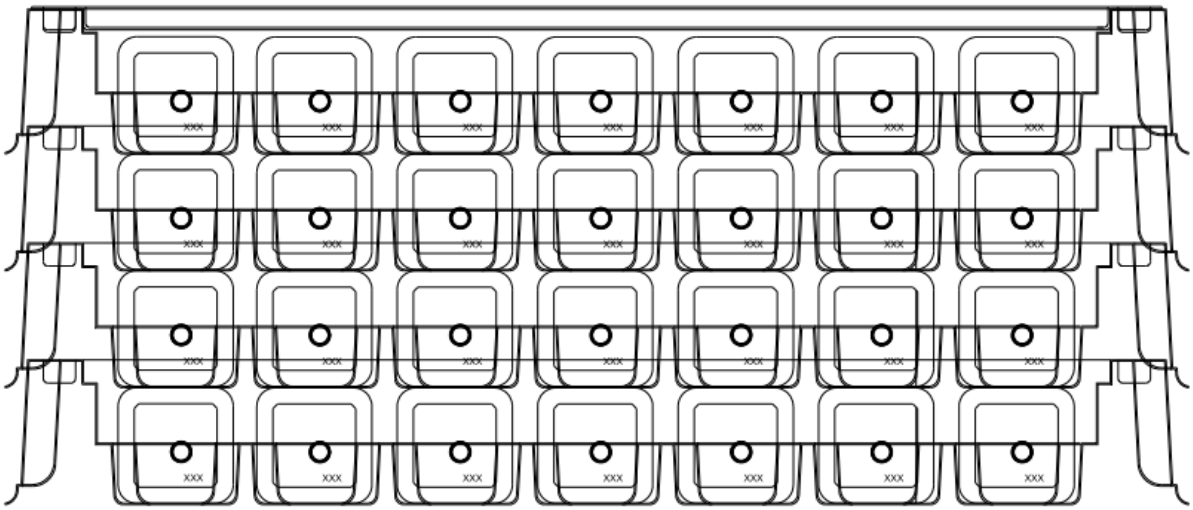

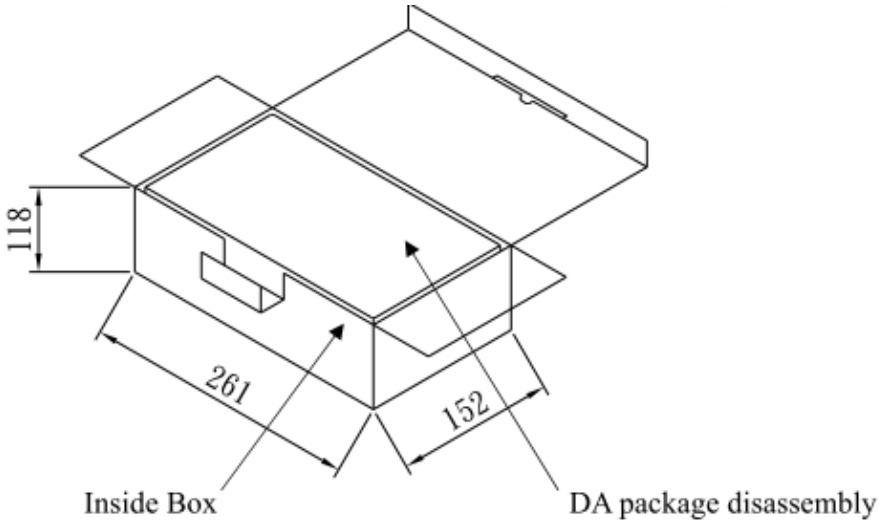
118
261
152
Inside Box
DA package disassembly

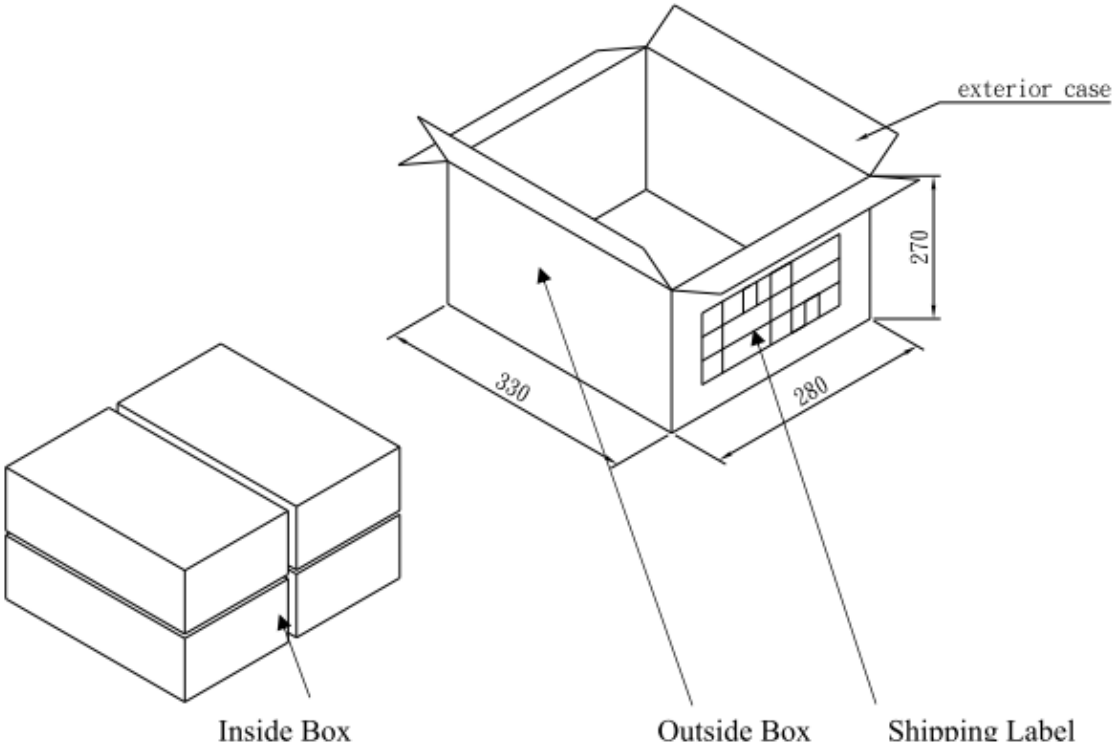
exterior case
270
330
280
Inside Box
Outside Box
Shipping Label

Mouser Electronics

Authorized Distributor

Click to View Pricing, Inventory, Delivery & Lifecycle Information:

Taoglas:
GP.1575.25.4.A.02